SAWMILL STRUCTURES™

WWW.SAWMILLSTRUCTURES.COM

HARVEST | MANUAL

Welcome to your new structure! Assembly is relatively simple, take your time to review this manual and enjoy building your new log cabin structure that is certain to bring you a lifetime of cherished memories.

QUICK OVERVIEW

Your Sawmill Structure log cabin kit comes to you very neatly and uniformly packaged on a rectangular pallet. The entire kit is already precision milled to fit together perfectly with minimal fasteners. All of the main pieces are also individually ID numbered so it's easy for you to understand where everything goes when you assemble it.

We include everything essential for you to create your cabin structure. The contents of the kit include our industry leading premium InterStack log wall system, beautiful tongue and groove wood plank flooring, pre-assembled gable ends, sturdy roof beams, tongue and groove roof ceiling planks plus all the windows and doors and trim.

The majority task to assemble your structure is simply stacking up the log wall system.
After you have stacked up the walls you can install the wood plank flooring , add on the pre-assembled gable ends and roof beams, apply the roof ceiling planks and pop in the windows and doors and you are done!
The entire structure can be assembled in as little as one day. Our kit systems are designed so there is no interior wall finishing required, once assembled everything inside and out is finished in beautiful aromatic natural timber. Your new structure is extremely well engineered and durable and with normal care it can last for generations.

All you need to supply for assembly is the people power plus provide your choice of roof covering material such as shingles, steel or our personal favorite ONDURA roof panels.

- You will also need to provide a level foundation base to assemble your structure on top of.
- Finally add a coat of exterior weather protection such as www.cutekstain.com after assembly is complete

(More information provided on foundations and ONDURA roof panels as your read on)

You will notice there are some extra pieces of lumber in your kit, we use extra wood to neatly stack the contents of the kit so don't worry, just assemble the parts you need.
*Helpful Hint: Use the extra packing pieces of the InterStack log wall system as a buffer when using your rubber mallet to tap down the log walls on top of each other.

TOOLS YOU NEED FOR ASSEMBLY

- **Hammer**
- **Rubber Mallet (To set the stacked logs on top of each other)**
- **Level**
- **Measuring Tape**
- **Cordless Screw Driver**
- **Nail gun (optional)**
- **Ladder**
- **Hand saw or circular saw for trim.**

HARVEST | FOUNDATION BASE INFORMATION

FOUNDATION INFO

Before you start you will need to provide a solid & level foundation base to assemble your structure on top of. Many types of foundation bases can be utilized as listed below.
Decide which option works best for your building site & budget.

Typically a simple wooden deck base foundation made from pressure treated lumber resting on grade with deck block footings or sono tube or screw pile footings is very suitable.

TYPES OF FOUNDATIONS TO CHOOSE FROM

- Wood deck base frame on grade with deck block footings or sono tube or screw pile footings
- Level Patio Stones
- Existing deck suitable to support the weight of the structure.
- Asphalt pad
- Concrete slab

FOUNDATION SIZE FOOTPRINT: 138” x 110.5”

- **EXACT FOUNDATION BASE SIZE REQUIRED FOR HARVEST IS 138" X 110.5”**
- **WEIGHT OF THE HARVEST IS 1814.37 kg (4000 pounds)**
- The foundation base size indicated above is specific the model you have purchased.

WOODEN DECK BASE PLAN

WE HAVE PROVIDED A WOODEN BASE FOUNDATION PLAN ON THE FOLLOWING TWO PAGES OF THIS MANUAL FOR YOUR CONSIDERATION.

THIS PLAN IS ALSO AVAILABLE FOR DOWNLOAD ON OUR WEBSITE IF YOU WOULD LIKE TO SHARE IT WITH A PROFESSIONAL.

HARVEST | FOUNDATION BASE INFORMATION

EASY TO BUILD BASE PLAN

The following plan is intended to assist you in building a wooden foundation base frame for the model structure you have purchased. The footings we have indicated on this plan are pre formed cement deck blocks. This base & footing method can work on fairly level building sites with decent drainage and well packed soil. You may need to add limestone screening under the deck blocks or add 4 x 4 corner posts to level your base as needed.

You may also elect to use an alternate footing solution such as screw piles or sono tubes, be sure to explore your options and choose the best type of footings to suit your sites grade and soil conditions.

This wooden base plan is sized 138” wide x 110.5” deep to fit the footprint of your structure exactly
- If you wish to incorporate any outdoor deck space such as a front or side porch area to your foundation base you will still need to provide support footings to the structures footprint.
- It may be wise to add your extra porch space after you have finished your structure assembly.

- **WOOD BASE OUTSIDE MEASUREMENT: 138” WIDE X 110.5“ DEEP**
- **STRUCTURE WEIGHT 1814.37 kg (4000 pounds)**
- **JOIST SPACING 13.6” ON CENTER**
- **JOIST DIRECTION: PARALLEL TO FRONT DOOR WALL**
- **8 PERIMETER FOOTINGS**
- **2” x 8” PRESSURE TREATED LUMBER**

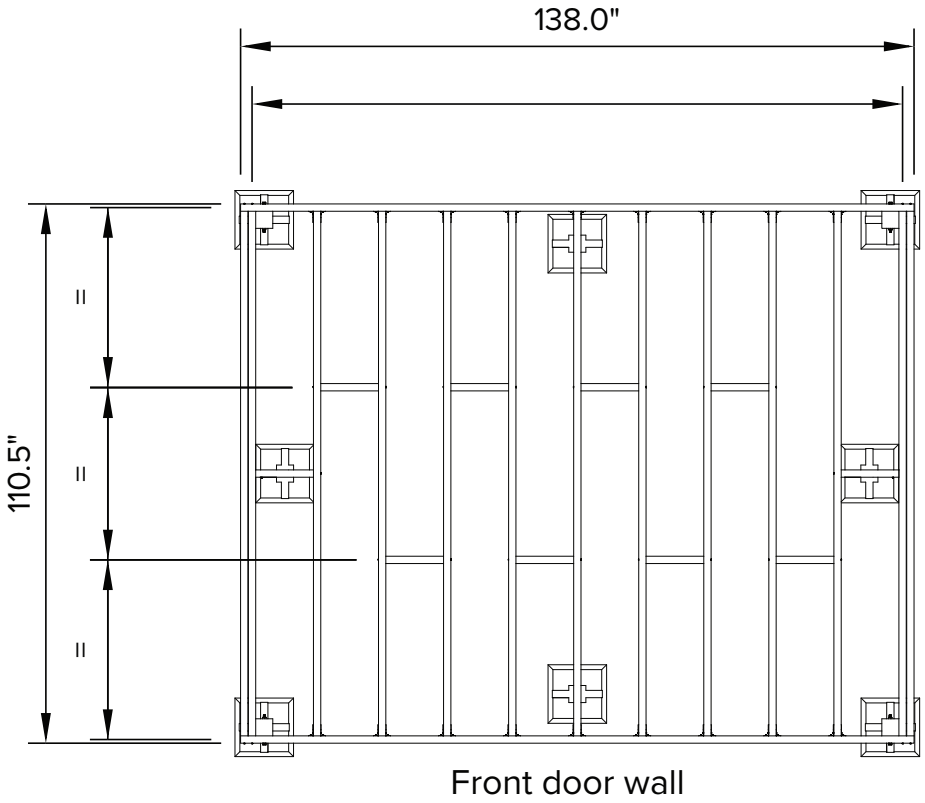

HARVEST | WOODEN FOUNDATION BASE PLAN • PART TWO

MATERIAL LIST

WOOD BASE OUTSIDE MEASUREMENT: 138" WIDE X 110.5" DEEP

Suggested lumber to build with is 2" x 8" pressure treated.

MATERIALS REQUIRED

- 2 pcs of 138" long - 2" x 8" pressure treated lumber cut to size
- 13 pcs of 107.5" long - 2" x 8" pressure treated lumber cut to size
- 10 pcs of 13.3" blocking 2" x 8" pressure treated lumber cut to size
- 20 pcs 3" long #8 deck screws to fasten blocking
- 18 joist hangers for 2" x 8" lumber
- 1 .25" nails or screws to secure joist hangers.

* **OPTION:**

In place of joist hangers you can use the following to secure joists to frame and corners 4" GRK Brand R.S.S Screws (rugged structural screws) two or three screws for each joist side available at most hardware stores

FOOTINGS:

- 8 cement deck blocks on grade with packed lime screening under OR 8 screw piles or sono tubes to support the perimeter of structure.

- **JOIST SPACING: 13 1/2" ON CENTER**
- **JOIST DIRECTION: PARALLEL TO FRONT DOOR DIRECTION.**

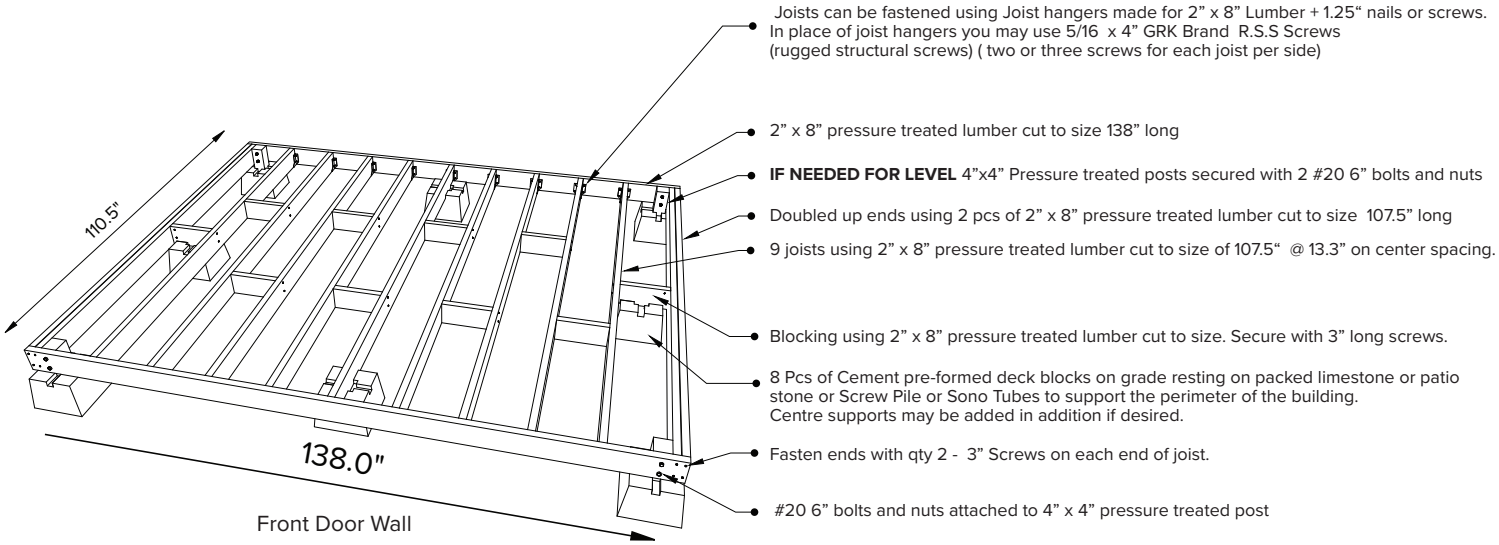

HARVEST | ASSEMBLY INSTRUCTIONS

Now that you have completed your foundation base, its time to assemble your structure. The following pages offer a step by step guide to assembly. Also included in the second half of this manual are elevation drawings and a complete parts list for your reference.

STEP 1

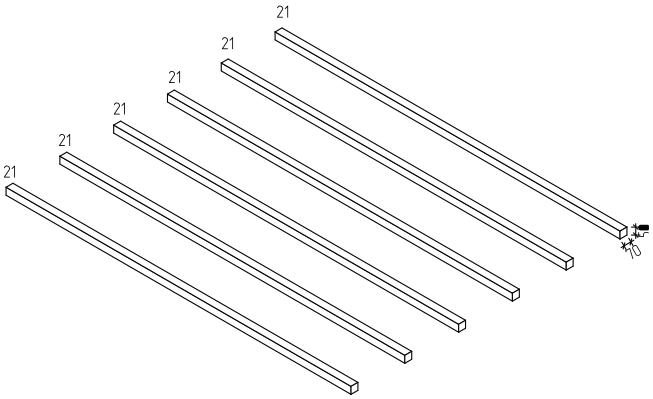

1) Start by laying down the first layer support strips (part #21 on top of your chosen foundation base. These support strips should run in the OPPOSITE DIRECTION to your foundation base joists and then be secured to the joists with 3” long screws after you have completed step 2 below.

Note: This manual illustrates the direction of the part #21 support strips running parallel to the front door wall, Your flooring boards will eventually be screwed directly to these part #21 in the opposite direction to which you have installed them. The inside of the structure is a perfect square so its a matter of preference the direction you want your floor to lay.
However the wooded base plan we have suggested would have your Part #21 orientated the opposite direction to what you see in this assembly manual. See Fig 1 - just note that as you are move along after these steps. Your final flooring planks will run parallel to the front door wall if you have used our base plan.

STEP 2

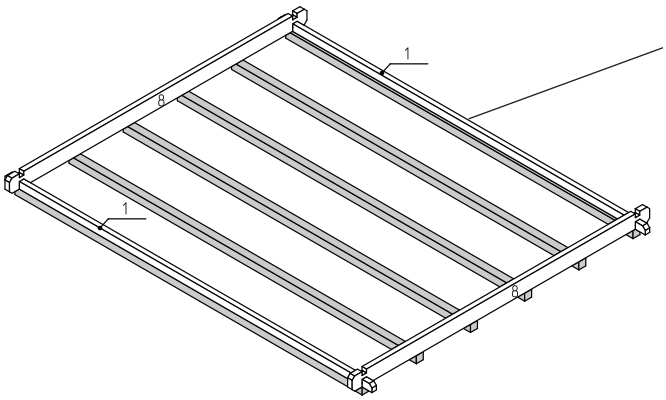

Leave a lip on the edge facing the Inside to support the floorboards.

1) Arrange your starter wall logs (part #8 and part #1) on top of the part #21 support strips as shown in STEP 1

2) Make sure to orientate the part #1 logs on the wall side you would like your front door and back wall to face.

3) Using 3” long screws to fasten the parts #16 support strips to the foundation base joists and also use 3” screws to fasten the corner of parts #1 and #8 to part #21

HARVEST | ASSEMBLY INSTRUCTIONS

STEP 3

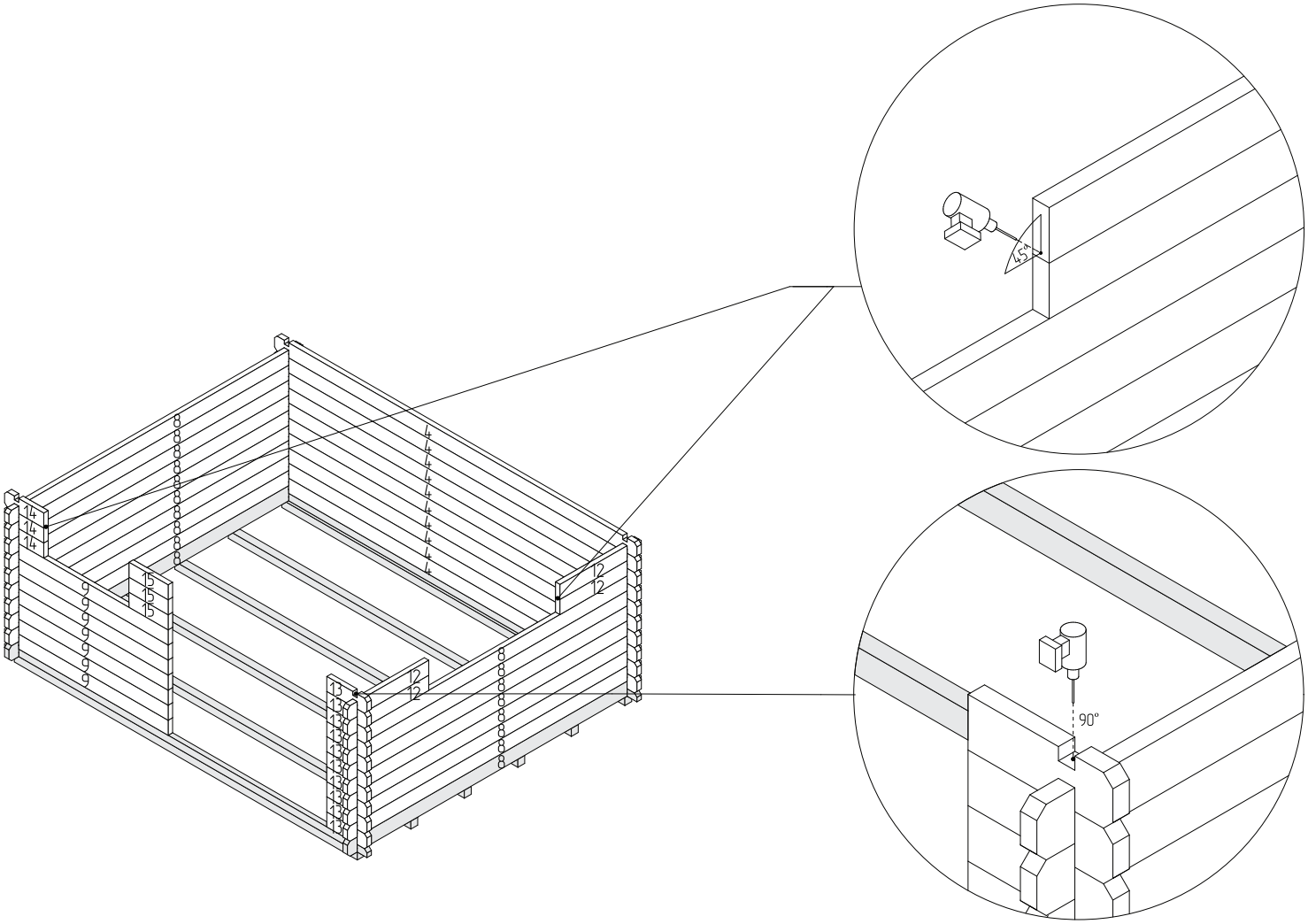

1) Begin to build all walls using parts #4, #8, #9, #12, #13, #14 and #15 as shown.

2) Fasten each corner down by screwing a 3" long number 8 screw on a 90 degree angle at every corner log notch to secure both pieces together.

3) Secure the front wall parts #14, #15, #12, #13 and at every log by screwing a 3" long number 8 screw on a 45 degree angle on the side of each piece.
(required number of screws 8'x3' - 220 pcs)

HARVEST | ASSEMBLY INSTRUCTIONS

STEP 4

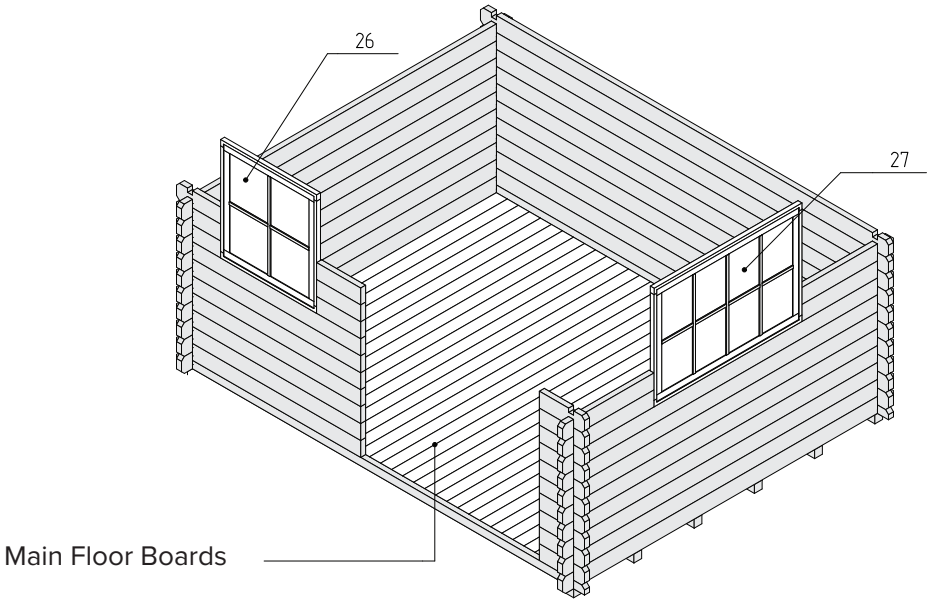

1) Interior floor boards: Screw the main floor boards into the starting strips part#21 using 2” or 2.5” long screws or appropriate nail gun fasteners.
Note: Floor board parts are not ID numbered however should be easily identifiable by size.
Note: You may need to rip down the last board. Screw into the face of the boards not the tongue. You may use a nail gun if you choose to tongue nail the floor boards down.

2) Side windows (part #27) will insert into the allocated openings at this stage, However we suggest waiting until the last step to install the windows and doors. Detailed instructions shown on Step 11, 12 and 13 for this.

STEP 5

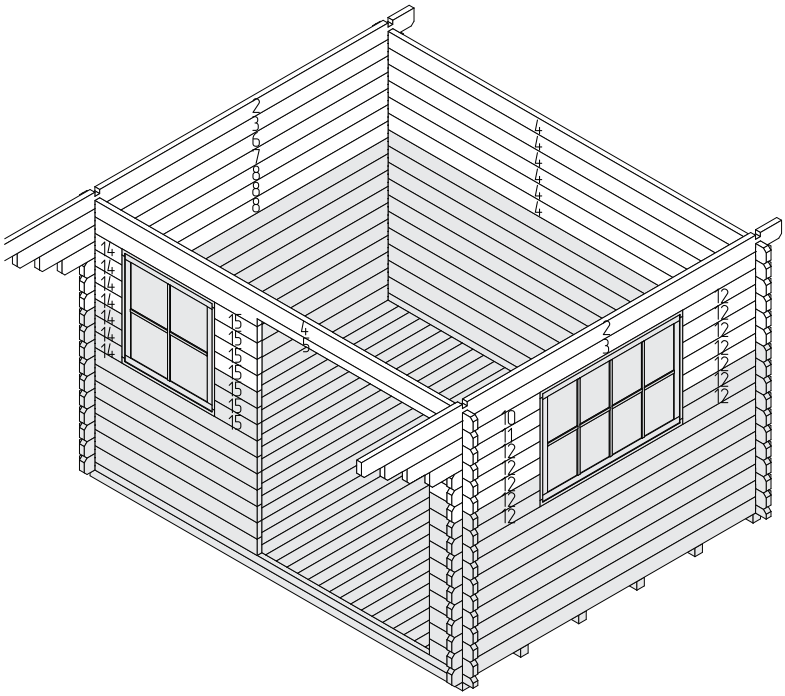

1) Continue stacking the wall log parts as pictured.

HARVEST | ASSEMBLY INSTRUCTIONS

STEP 6

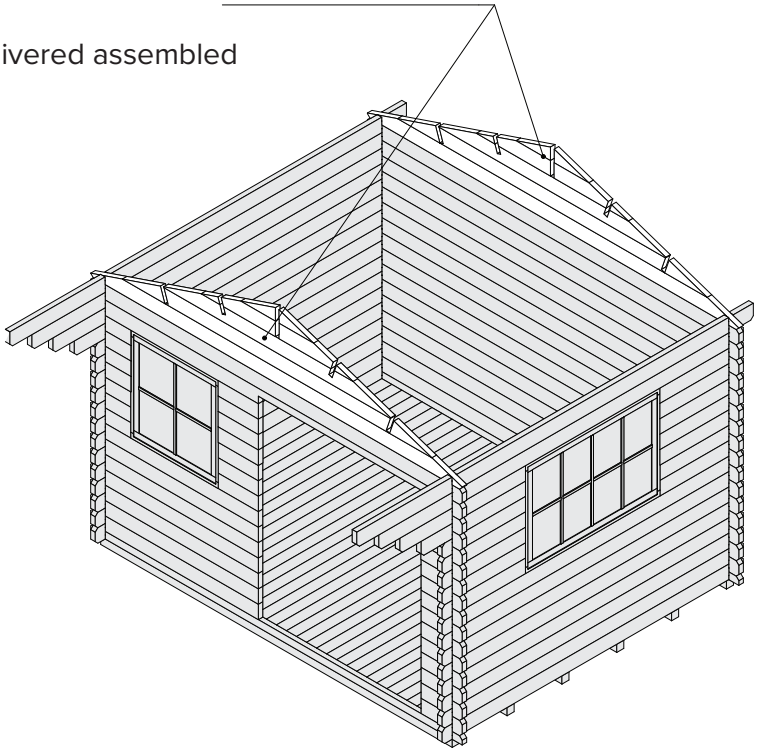

1) Insert the pre-assembled Pediments (gable ends) by resting them on top of the #4 logs you installed in STEP 5
2) Screw a few 3” long screws on a 45 degree angle at the bottom to secure the Pediments (Gable ends) to the #4 logs. When you install the roof rafters this will tie everything together.

Note: The strips that hold the gable end logs pieces together should not be taken off and should be facing the Inside of the structure not the outside.

STEP 7

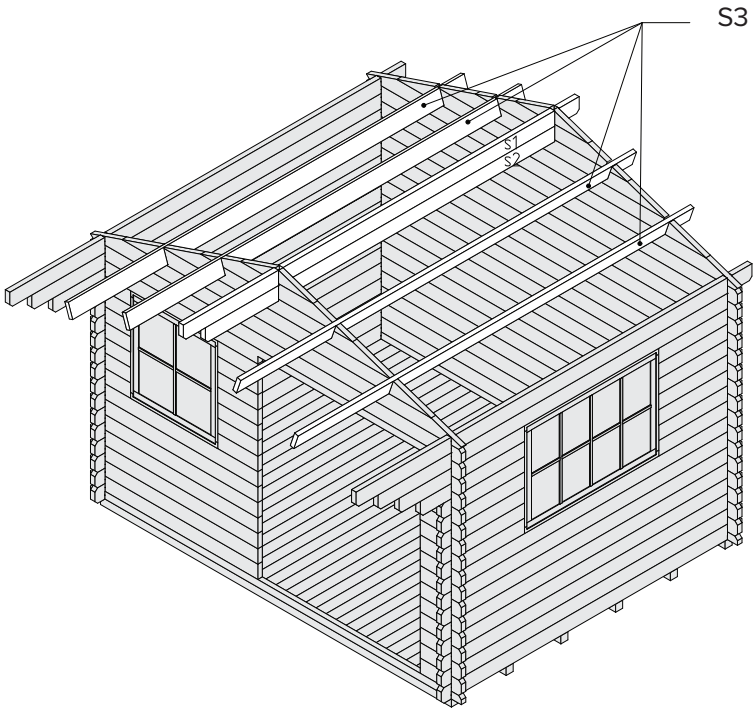

1) Insert the roof rafters parts #S1, #S2 and #S3 as shown

HARVEST | ASSEMBLY INSTRUCTIONS

STEP 8

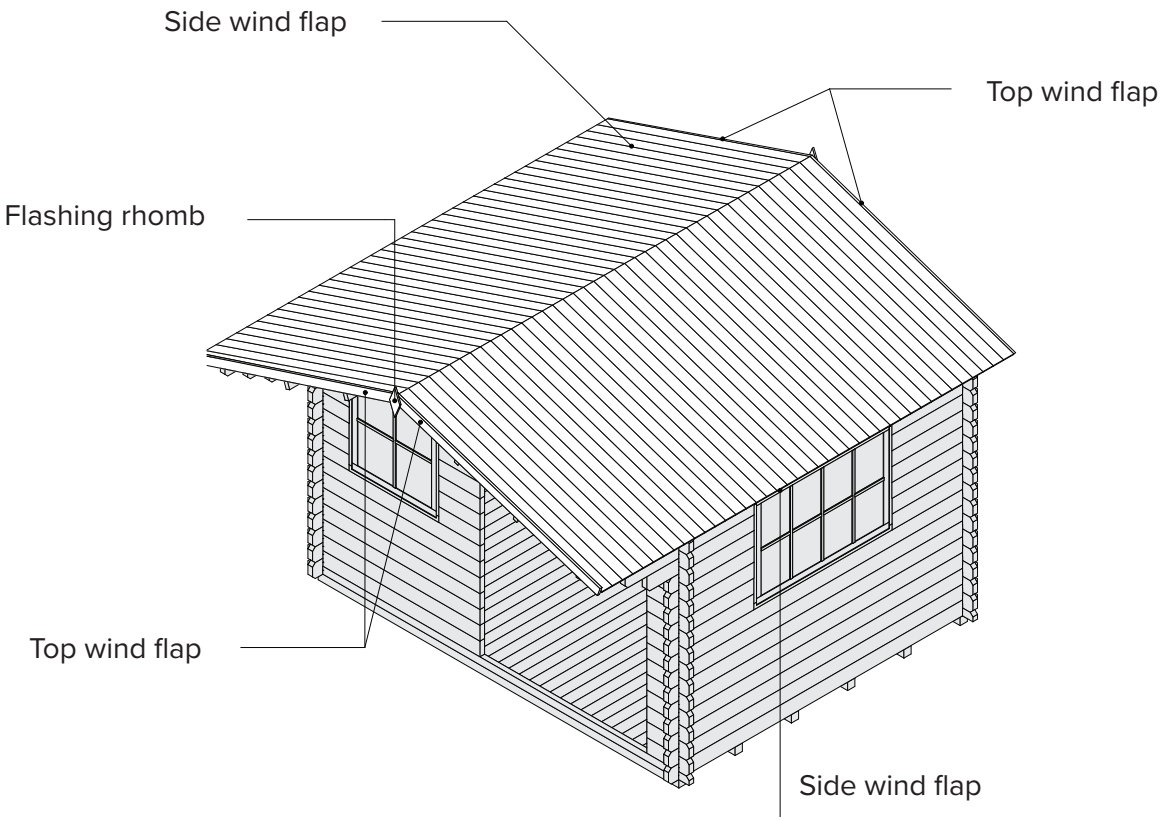

1) Apply roof sheathing boards making sure they are uniformly level with the ridge beam all the way across.
2) Fasten the sheathing to roof rafters using a nail gun or screws so no fasteners are visible.
3) Attach the windflap trim pieces (not ID numbered) at this stage or you can also wait until after your roof finishing material is installed to do this step.

STEP 9

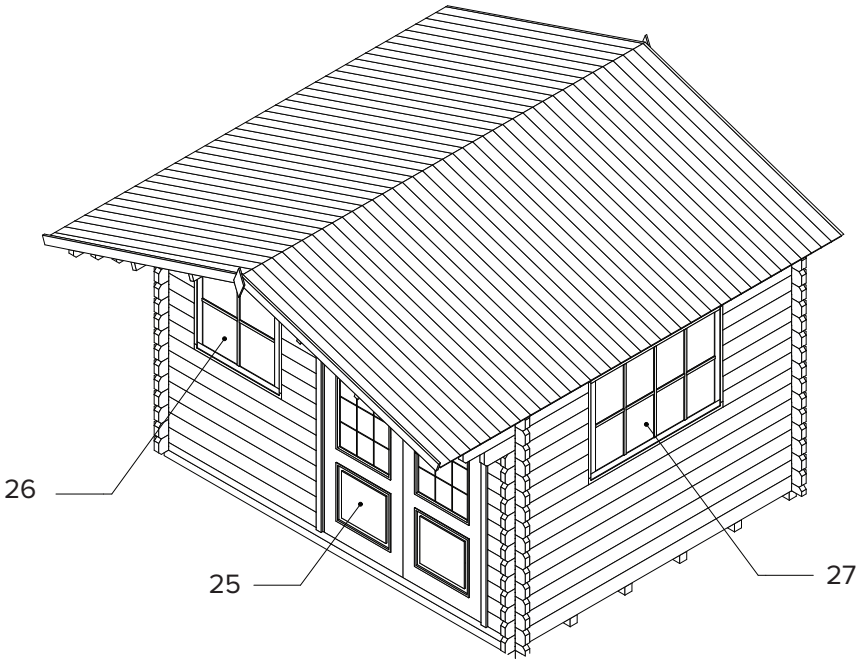

1) Insert remaining windows and doors.

HARVEST | ASSEMBLY INSTRUCTIONS - WINDOWS & DOORS

STEP 10

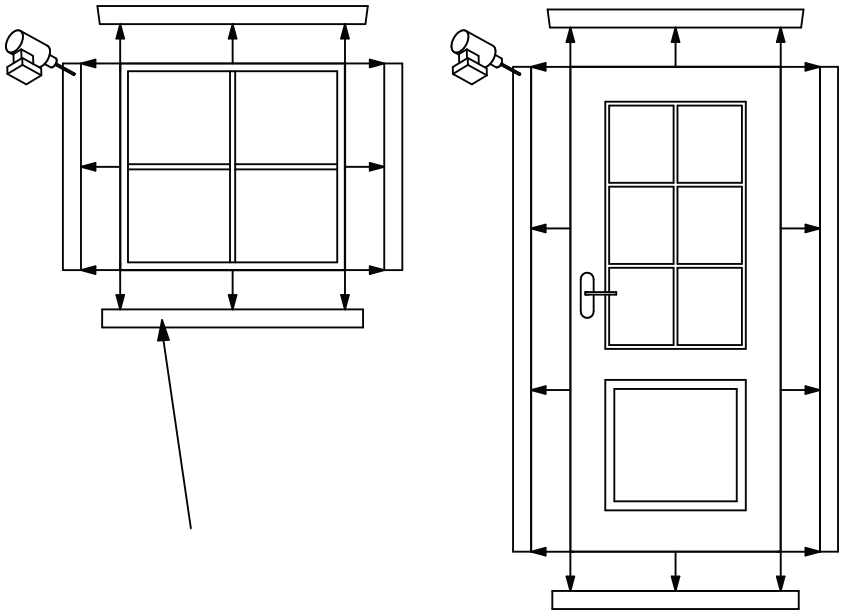

1) Remove the trim off one side of each window and door for convenient installation.
2) Dry fit each window and door into the appropriate opening.
3) You will need to shim the bottom of each window and door to create a gap at the bottom and raise up the part so it fits evenly inside the space.
4) Check to make sure the windows and doors are level.

STEP 11

1) Screw the window and door trim back into place to hold everything together inside the opening.

2) *Should the door require further securing you may choose to fasten a screw at the bottom or top of the door frame into the wall to further secure it to the main structure.

Do not over tighten this screw (if it is needed) as you want to make sure to keep the door as square as possible and avoid warping the frame.

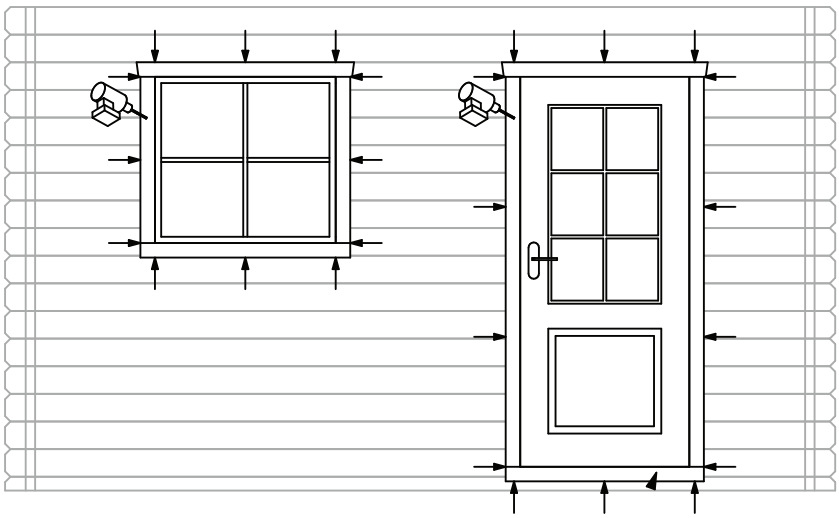

HARVEST | ONDURA ROOF FINISHING MATERIAL

Although we do not include any roof shingling material in our kit packages, we highly recommend that you choose ondura corrugated asphalt roofing sheets for your own DIY assembly.

Ondura products offer a lightweight and attractive solution for roofing projects.
Ondura very economical and relatively quick to install. Ondura is made with a tough organic finer core that is completely infused with asphalt as the weather protection barrier.

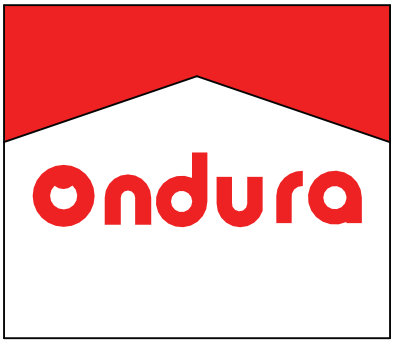

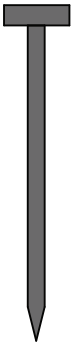

ONDURA comes in sheet sizes of 36' x 79" and is available at most local Home Depot locations.

The area of roof to cover on each sloped side of a Harvest model is 162”L x 87”H

You will require 10 sheets of ONDURA roof panels in your
choice of colour + 2 ridge caps and 1 box of ONDURA specific nails
ONDURA SHOULD BE SCREWED DIRECLY INTO THE ROOF BEAMS OF YOUR STRUCTURE.

HARVEST | PLAN OF THE AXIS - A/B

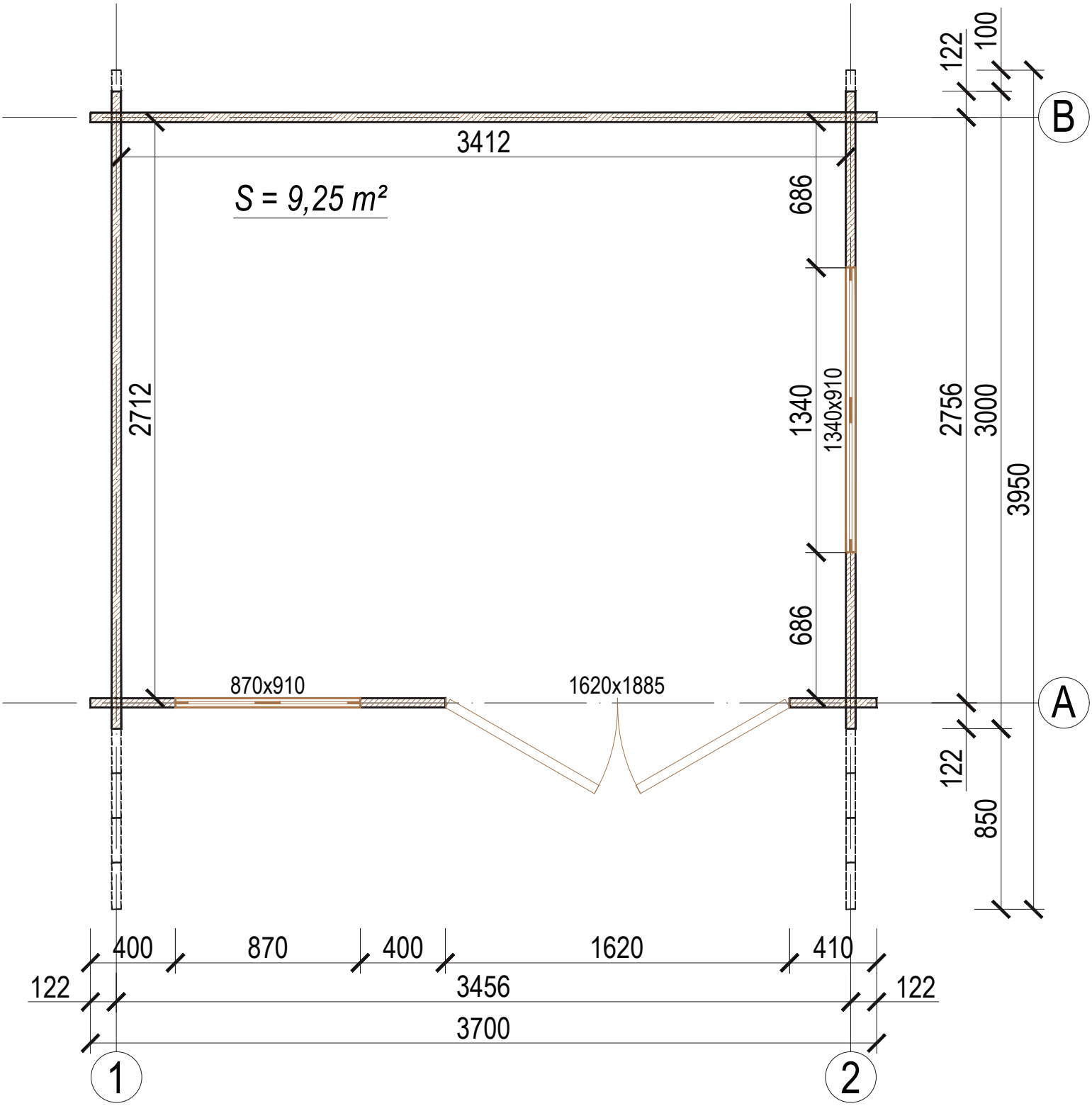

HARVEST | WALL ON AXIS A

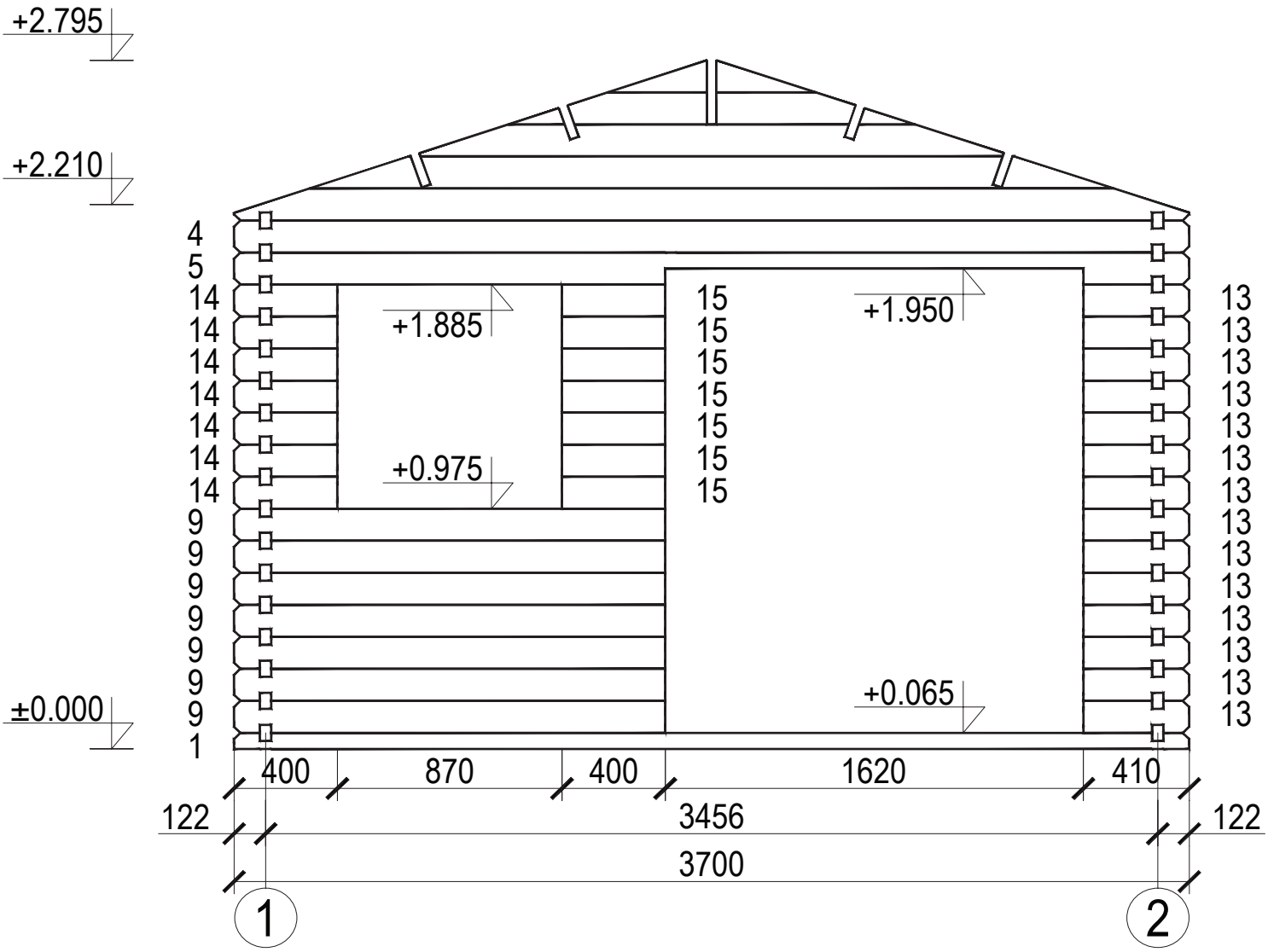

HARVEST | WALL ON AXIS B

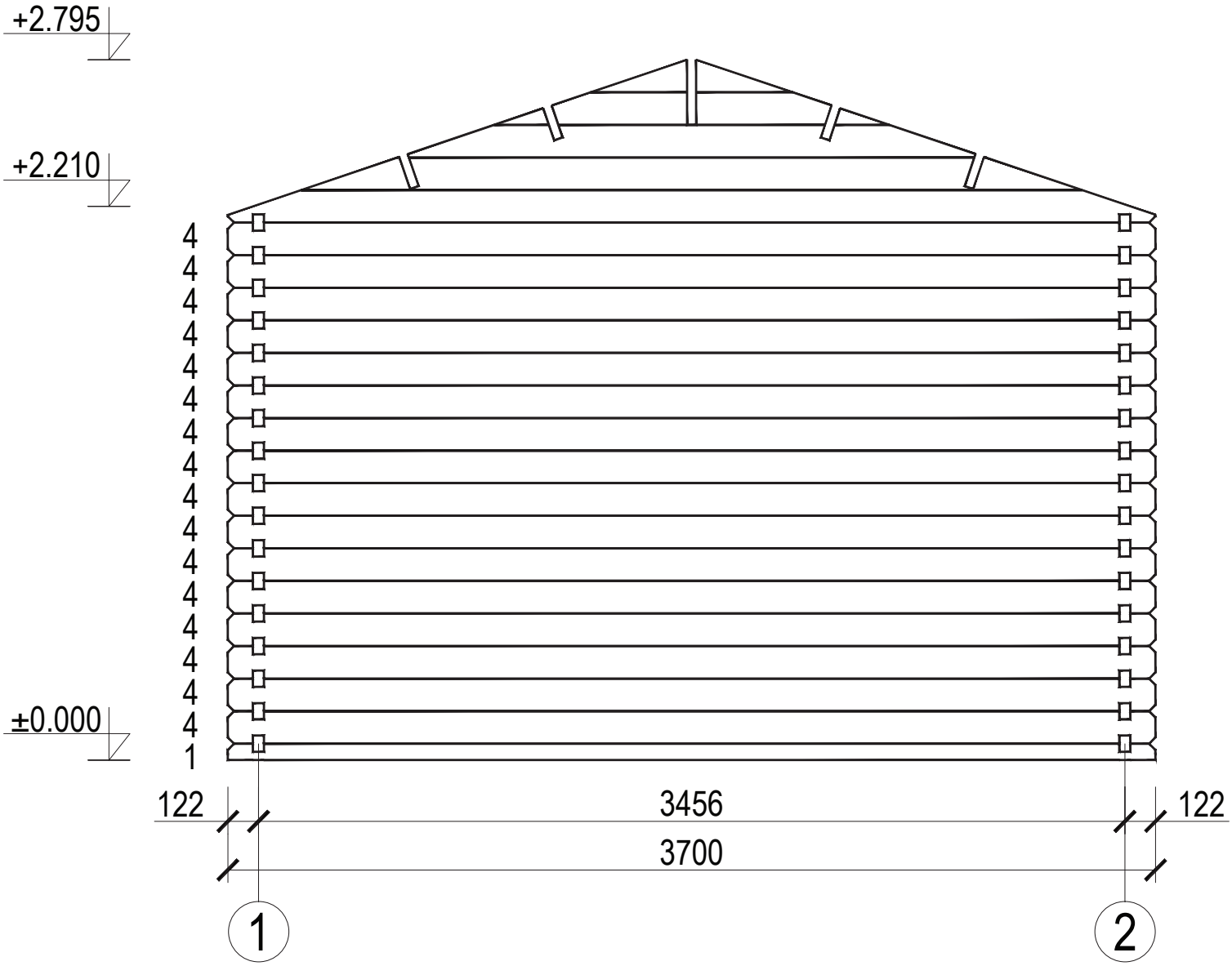

HARVEST | WALL ON AXIS 1

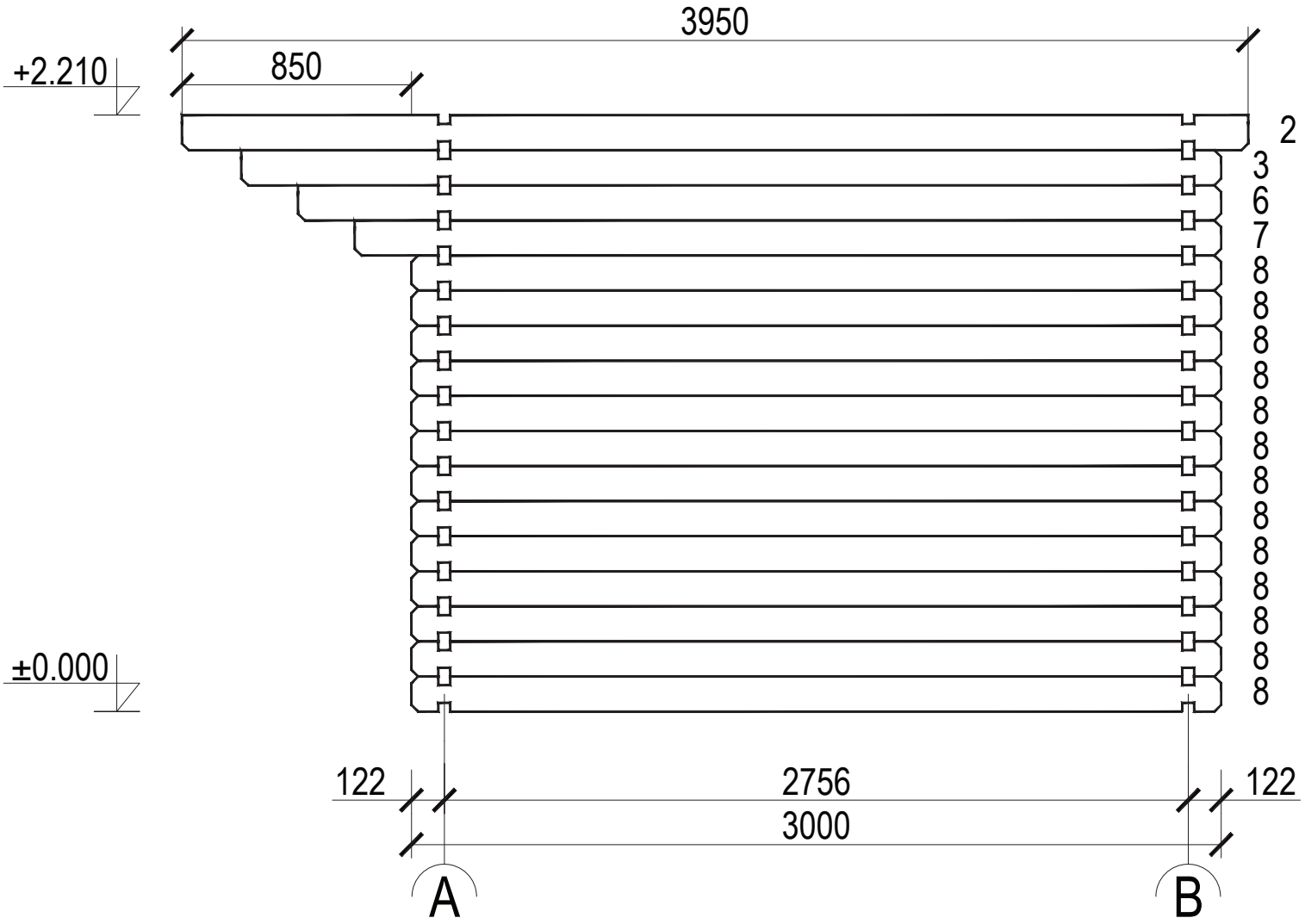

HARVEST | WALL ON AXIS 2

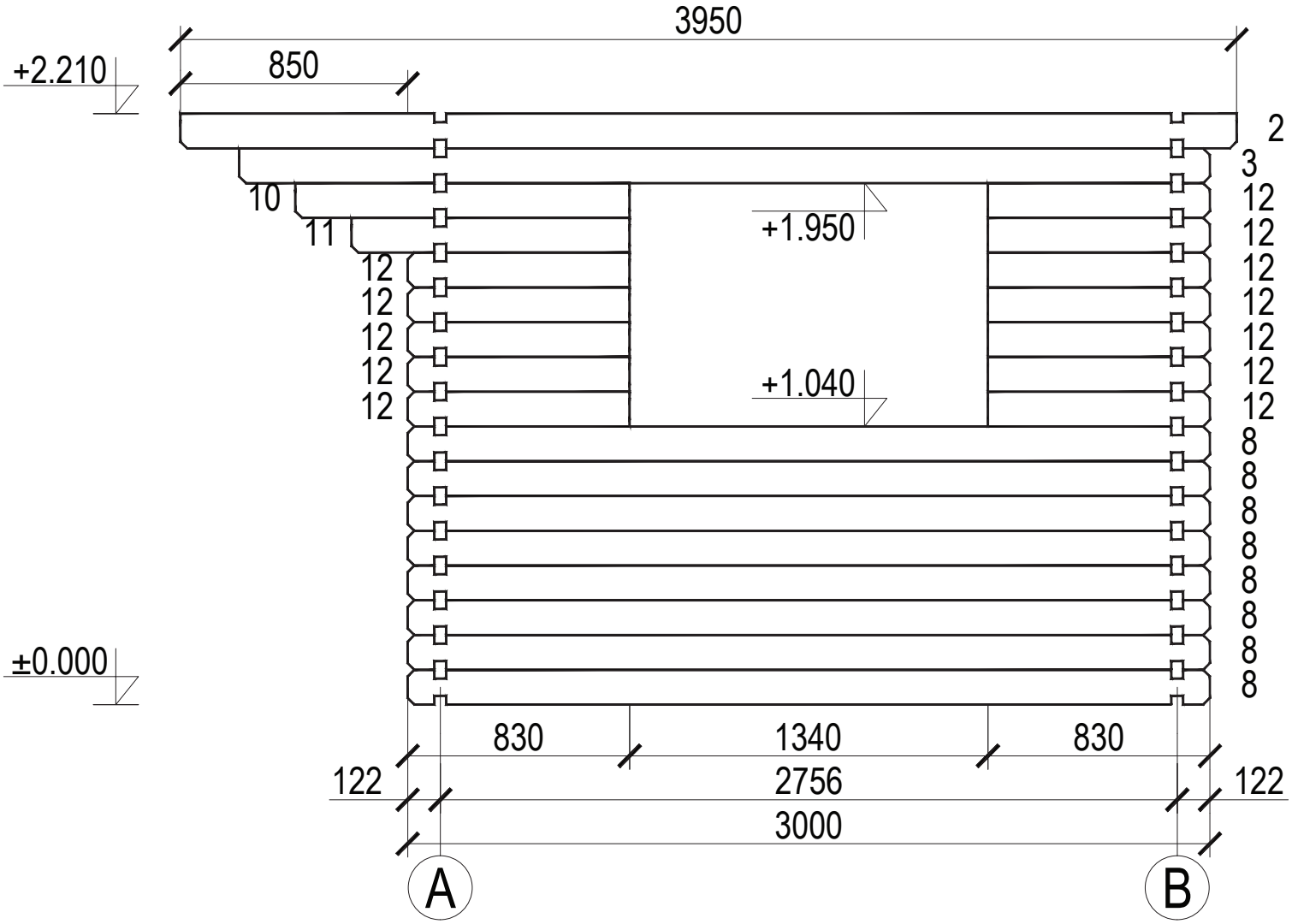

HARVEST | PEDIMENT ON AXIS A & B & DETAILS

Pediment on axis A, B

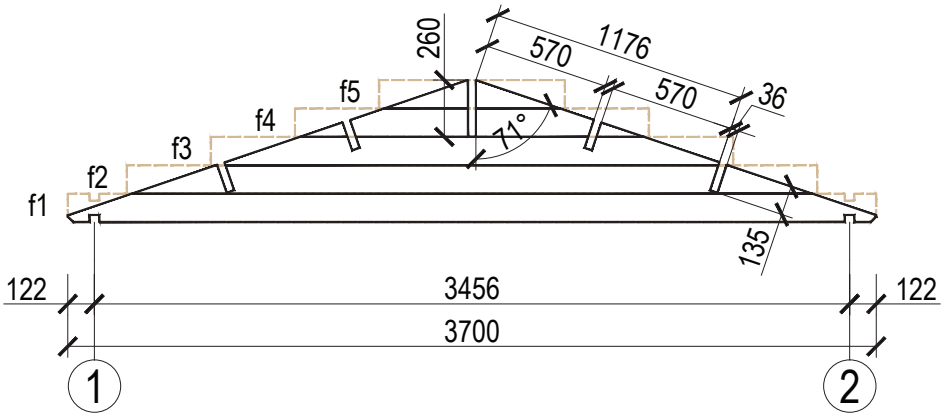

Rafter 44x130

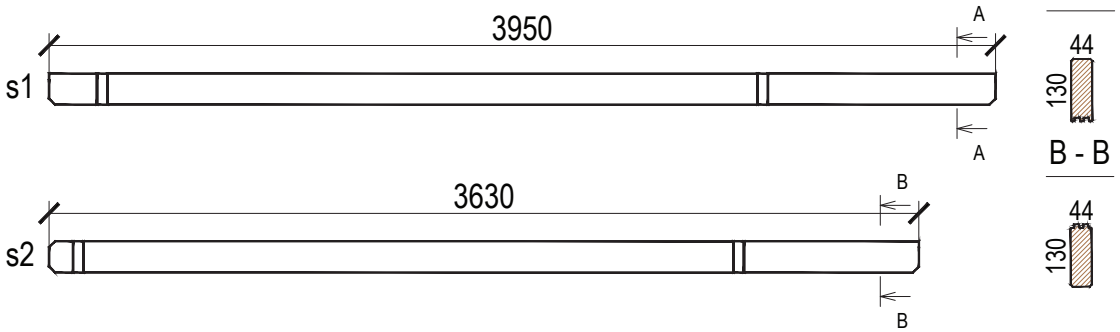

Rafter 44x135

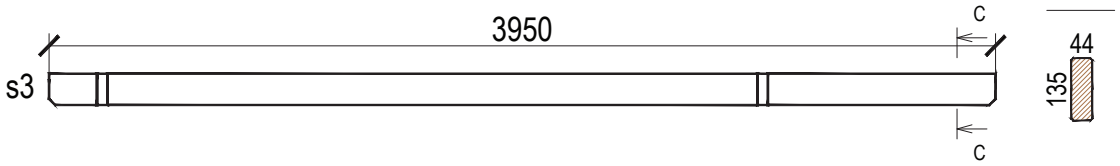

Starting item 44x130

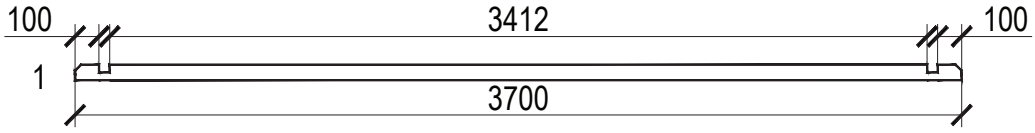

Details

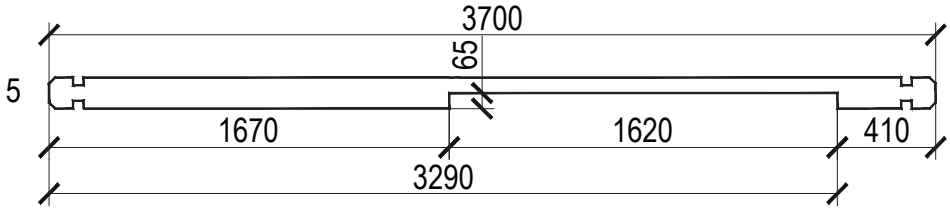

HARVEST | WIND FLAP & RHOMB

Front wind flap

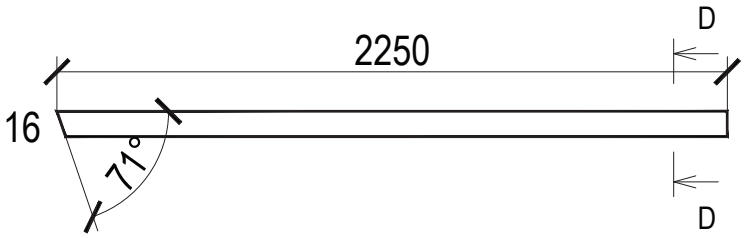

D - D

Top wind flap

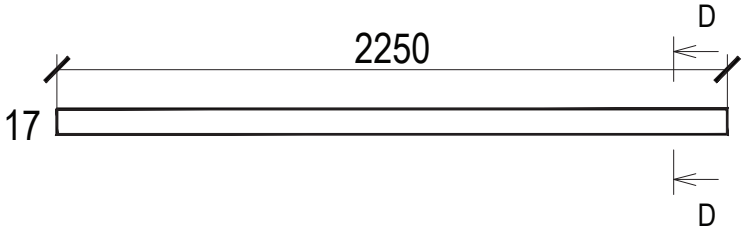

Side wind flap

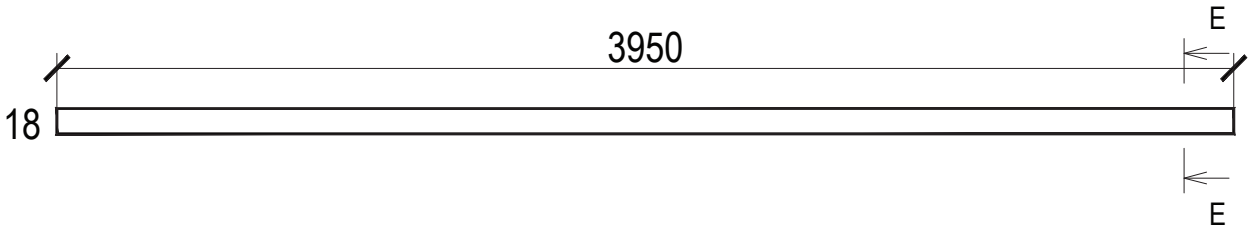

E - E

Flashings rhomb

HARVEST | PARTS LIST

№	Details	Lenght	Pcs.
Starting item 44x130			
1		3700	2
Wall 44x130			
2		3950	2
3		3630	2
4		3700	17
5		3700	1
6		3420	1
7	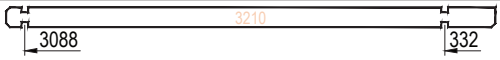	3210	1
8		3000	21
9		1670	7
10	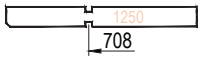	1250	1
11	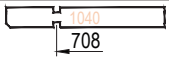	1040	1
12	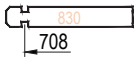	830	12
13		410	14
14		400	7
15		400	7
Pediment 44x130			
f1	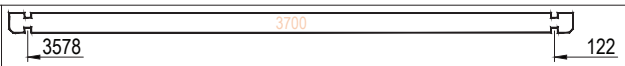	3700	2
f2	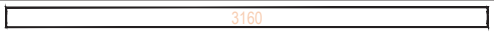	3160	2
f3		2390	2
f4		1620	2
f5		850	2
Rafter 44x130			
s1		3950	1
s2		3630	1
Rafter 44x135			
s3		3950	4

HARVEST | PARTS LIST

№	Name of part	Lenght	Amount			
16	Front wind flap 16x85	2250	4			
17	Top wind flap 16x85	2250	4			
18	Side wind flap 16x44	3950	2			
19	Flashings rhomb	pcs.	2			
20	Plinth	m.	21			
21	Logs 50x70	3410	6			
22	Floor covering	2710	28x85	28x90	28x113	28x130
			41	38	31	27
23	Board on the roof	2200	16x85	16x90	16x113	16x130
			47	44	35	31
24	Board on the roof	2200	16x85	16x90	16x113	16x130
			47	44	35	31
25	Door 1620x1885	pcs.	1/2 glass	wooden	glass	
			1			
26	Window 870x910	pcs.	1			
27	Window 1340x910	pcs.	1			
28	Mosquito net 830x835	pcs.	1			
29	Mosquito net 1270x835	pcs.	1			